kerberos



KET-SHA-020.21

Hall effect openable current sensor with measuring range 200 A

- **Open loop structure**
- **Easy to install**
- **Measuring range 200 A**
- **High precision and good linearity**

The **KET-SHA-020.21** is part of a series of newly developed open-loop **Hall current sensors** that can be used to detect DC, AC current signals, even high frequency, pulse and irregular current signals.
Isolated on the primary and secondary side, **it ensures maximum electrical safety**.
Equipped with 2 m long connection cable, with RJ12 connector, through which power is supplied from a single external DC and stabilized voltage.

Applications

Monitoring consumption

Accounting

Accessories

KET-MDC-416

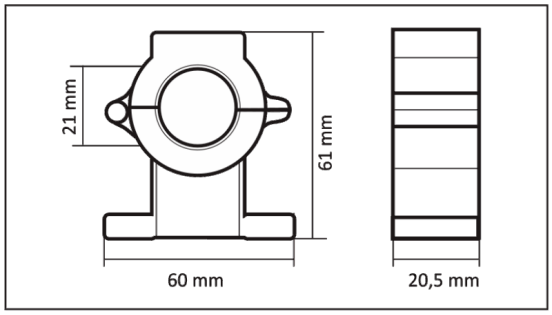

Technical Features

General specifications	**Operative Temperature**: -25 ÷ +80 °C **Storage Temperature**: -40 ÷ +85 °C
Case	**Dimensions**: 60 x 61 x 20.5 mm (W x H x D) **Cable Diameter**: Max 21 mm **Material**: Self extinguishing: UL 94 V-O
Power supply	**Supply Voltage**: +5 (±1%)VDC **Consumption**: <=15 mA **Connectors types**: RJ12 (6P4C)
Current sensor	**Sensor Type**: Hall effect openable sensor **Current Range**: ±200 A **Voltage Output**: 1.5 ÷ 3.5 V **Internal Resistance**: >=10 kOhm **Precision**: <=2 .0% (T=25°C VC=±15V) **Linearity**: <=2 .0% (T=25°C) **Hi Pot Test**: 3.0 kV/Min
Certifications	**Referends Standard**: RoHS Compliant