kerberos



KET-PMM-311

Single-phase insertion energy meter up to 60 A

- **Up to 60 A**
- **Direct insertion connection method**
- **ModBUS-RTU Protocol**
- **LCD's Display**

Applications

Monitoring consumption

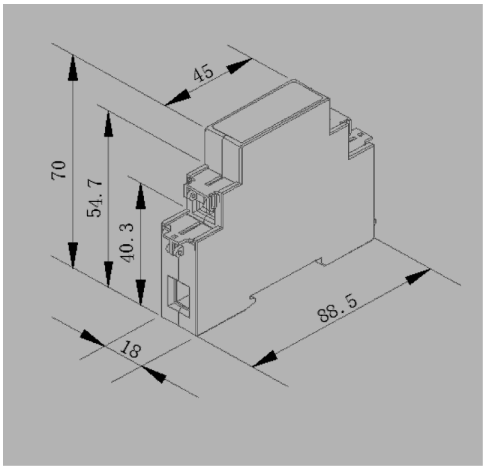

The **KET-PMM-311** is a new-generation, single-phase, direct-input electricity meter for installation on low-voltage systems. The device, equipped with an LCD display, incorporates measurement, statistics and communication functions, among others. Advantages from which the meter can benefit include, for example, high stability, low power consumption and data storage after a power failure. All meters fulfil the technical requirements for electronic power meters in the IEC62053-21, IEC62053-22 standards. Features **ModBUS-RTU** protocol with RS485 interface to meet network management requirements.

Technical Features

General specifications	**Protection Range**: IP20 **Operative Temperature**: -25 ÷ +55 °C **Storage Temperature**: -40 ÷ +70 °C **Relative Humidity**: MAX 95% not condensing
Case	**Dimensions**: 18 x 96 x 70 mm (W x H x D) **Mounting**: DIN-rail **Required DIN modules**: 1 DIN module
Power supply	**Supply Voltage**: 230 VAC (50 Hz) **Consumption**: Self-consumption <10 VA **Connectors types**: Integrated screw terminals
Power meter	**Insertion Types**: 1-phase 2-wire **Connection**: Direct measurement **Maximum Rated Current**: 10(60) A **Accuracy**: 1 Class **Connections**: Screw connectors <4.0 Nm **Supported Protocols**: ModBUS RTU **Communication Rate**: 38400, 19200, 9600, 4800 bps **Isolation**: Class II **Connectors types**: Integrated screw terminals **Current Inputs**: 80 A
Certifications	**Referends Standard**: IEC62053-21, IEC62053-22