kerberos

IP30 RS485 ModBUS



KET-CCL-135.DAI

ModBUS Gateway with universal interface for all HVAC systems; Daikin VRV version

• Unified Climate ModBus Map (UCLIM) - same ModBUS addresses and registers for every brand (Daikin, Mitsubishi, etc.)
• Zero Configuration - immediate integration without studying proprietary protocols
• Industrial Performance - Instantaneous Response and Comprehensive Diagnostics in Real Time.

Applications

Thermoregulation

Versius

KET-RMB-211.CN.35

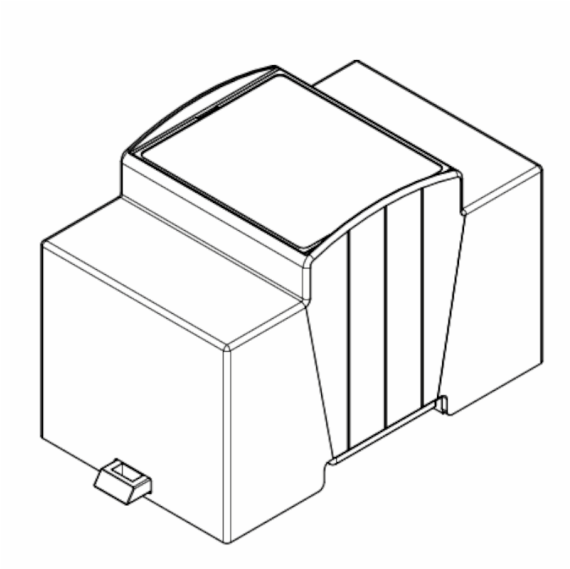

Technical Features

General specifications	**Protection Range**: IP30 **Operative Temperature**: -10 ÷ +60 °C
Case	**Dimensions**: 53.5 x 90.5 x 61 mm (L x H x D) **Mounting**: The DIN rail **Required DIN modules**: 3 DIN modules **Electric Board Type**: Industrial or consumer unit **Material**: Blend PC/ABS self-extinguishing UL94-V0
Power supply	**Supply Voltage**: 12 ÷ 48 VDC/AC **Consumption**: 370 mA **Connectors types**: Pluggable spring terminal blocks
Datalogger function	**Memory Type**: F-RAM: parameter storage in case of power loss
Rs485 interface	**Channels**: 1 Master and 1 Slave **Supported Protocols**: ModBUS RTU Slave to the PLC and ModBUS RTU Master to the HVAC control unit **Communication Rate**: 9600 to 38400 bps; default set to 38400 bps **Isolation**: Isolated **Connectors types**: Pluggable spring terminal blocks
Digital inputs	**Channels**: 4 digital inputs for dry contact (Max. 30 Hz)
Rele' outputs	**Channels**: 4 SPDT relay digital outputs with NC C NO changeover contact **Maximum Switching Voltage**: 250 VAC, 24 VDC **Maximum Rated Current**: 8 A **Max. Inrush Peak Currents**: High-Inrush Model: Peak current up to 100 A **Isolation**: 1,000 MOhm min @ 500 VDC
Certifications	**Approvals**: CE
Compatibility	**Control Unit**: Daikin Modbus Interface DIII EKMBDXB7V1 **Brand**: Daikin **Controlled Units**: VRV Indoor Units