kerberos



KET-RKE-032

Industrial extension cord 32 A with ModBUS single-phase power meter

- **Integrated Power Meter**
- **Supports loads up to 32 A**
- **Extension length of 3 m**
- **RS485 ModBUS Output**

KET-RKE-032 is an industrial extension cord with an integrated **single-phase current meter** that supports loads up to 32 A.
It is equipped with an RS485 port to connect to other KET-RKE series in daisy-chain (with KET-RKY-101 accessory cable) and to the Rack Monitor KET-RKS or KET-RKM (with KET-RKY-100 accessory cable).
The extension has a total length of 3 m and has a three-pole connector (phase, neutral, ground) that sports 230 VAC @ 32 A.

Applications

Data center

Versius

KET-RKE-063.P32S32

KET-RKE-063

Accessories

KET-RKM-100

KET-RKS-100

KET-RKY-101

KET-RKY-100

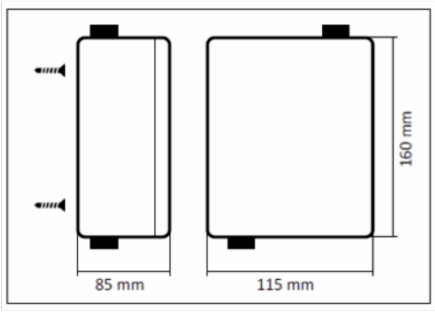

LE SPECIFICHE TECNICHE E LE IMMAGINI RIPORTATE IN QUESTA SCHEDA TECNICA SONO SOGGETTE A VARIAZIONI E AGGIORNAMENTI

CODE

KET-PMM-310

Technical Features

General specifications	**Protection Range**: Case: IP56; Socket: IP67 **Operative Temperature**: -25 ÷ +55 °C **Storage Temperature**: -40 ÷ +70 °C **Relative Humidity**: MAX 95% not condensing
Case	**Dimensions**: 160 x 115 x 85 mm (W x H x D) **Mounting**: Wall **Material**: Thermoplastics
Power supply	**Supply Voltage**: Self power, 230 VAC (50 Hz) **Consumption**: <10 VA **Connectors types**: Industrial extension of 3 m (5 x 6 mm²) with 3-pin connectors (phase, neutral and ground)
Rs485 interface	**Supported Protocols**: ModBUS RTU **Communication Rate**: 38400, 19200, 9600, 4800 bps **Isolation**: Class II **Connectors types**: 1 RJ45 for connection to other extensions and 1 RJ45 for connection to the rack
Current and voltage input	**Voltage Inputs**: 230 VAC **Current Inputs**: 32 A @ 50 Hz
Certifications	**Referends Standard**: EN50470, IEC61000, EN55022, IEC60068, IEC60529, IEC60695-2-11 **Approvals**: CE, MID