kerberos

IP56 RS485 ModBUS #400VAC



KET-RKE-063

Industrial extension cord 63 A with ModBUS three-phase power meter

- **Integrated Power Meter**
- **Supports loads up to 63 A**
- **Extension length of 3 m**
- **RS485 ModBUS Output**

The **KET-RKE-063** is an industrial extension cable complete with **three-phase current meter** that supports loads up to 63 A.
It is equipped with an RS485 port to connect to other KET-RKE series in daisy-chain (with KET-RKY-101 accessory cable) and to the Rack Monitor KET-RKS or KET-RKM (with KET-RKY-100 accessory cable).
The extension has a total length of 3 m and has a 5-pole connector (3 phases, neutral, ground) of 400 VAC @ 63 A.

Applications

Data center

Versius

KET-RKE-063.P32S32

KET-RKE-032

Accessories

KET-RKM-100

KET-RKS-100

KET-RKY-101

KET-RKY-100

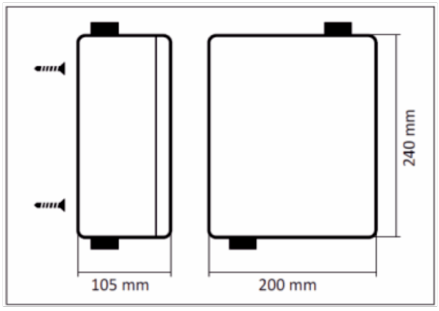

LE SPECIFICHE TECNICHE E LE IMMAGINI RIPORTATE IN QUESTA SCHEDA TECNICA SONO SOGGETTE A VARIAZIONI E AGGIORNAMENTI

CODE

KET-PMT-221

Technical Features

General specifications	**Protection Range**: Case: IP56; Socket: IP67 **Operative Temperature**: -25 ÷ +55 °C **Storage Temperature**: -30 ÷ +70 °C **Relative Humidity**: MAX 95% not condensing
Case	**Dimensions**: 240 x 200 x 105 mm (W x H x D) **Mounting**: Wall **Material**: Thermoplastics
Power supply	**Supply Voltage**: 400 VAC @ 63 A (45-65 Hz) **Consumption**: < 10 VA (single phase) **Connectors types**: Industrial extension of 3 m (5 x 16 mm²) with 5-pin connectors (3 phases, neutral and ground)
Rs485 interface	**Supported Protocols**: ModBUS RTU **Communication Rate**: 1200 ÷ 38400 bps **Isolation**: Class II **Connectors types**: 1 RJ45 for connection to other extensions and 1 RJ45 for connection to the rack
Current and voltage input	**Voltage Inputs**: 400 VAC **Current Inputs**: 63 A @ 45-65 Hz
Certifications	**Approvals**: CE **Metrology**: EN62053-21