kerberos



# KET-SHA-020.21

## Hall effect openable current sensor with measuring range 200 A

- **Open loop structure**
- **Easy to install**
- **Measuring range 200 A**
- **High precision and good linearity**

The **KET-SHA-020.21** is part of a series of newly developed open-loop **Hall current sensors** that can be used to detect DC, AC current signals, even high frequency, pulse and irregular current signals.
Isolated on the primary and secondary side, **it ensures maximum electrical safety**.
Equipped with 2 m long connection cable, with RJ12 connector, through which power is supplied from a single external DC and stabilized voltage.

### Applications

Monitoring consumption

Accounting

### Accessories

KET-MDC-416

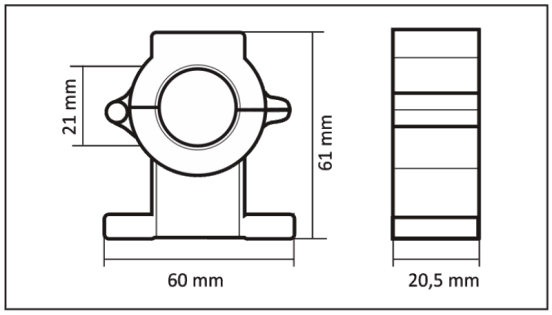


### Technical Features

| | |
|---|---|
| General specifications | **Operative Temperature**: -25 ÷ +80 °C<br>**Storage Temperature**: -40 ÷ +85 °C |
| Case | **Dimensions**: 60 x 61 x 20.5 mm (W x H x D)<br>**Cable Diameter**: Max 21 mm<br>**Material**: Self extinguishing: UL 94 V-O |
| Power supply | **Supply Voltage**: +5 (±1%)VDC<br>**Consumption**: <=15 mA<br>**Connectors types**: RJ12 (6P4C) |
| Current sensor | **Sensor Type**: Hall effect openable sensor<br>**Current Range**: ±200 A<br>**Voltage Output**: 1.5 ÷ 3.5 V<br>**Internal Resistance**: >=10 kOhm<br>**Precision**: <=2 .0% ( T=25°C VC=±15V)<br>**Linearity**: <=2 .0% ( T=25°C)<br>**Hi Pot Test**: 3.0 kV/Min |
| Certifications | **Referends Standard**: RoHS Compliant |