kerberos

IP30 RS485 ModBUS



# KET-CCL-135.DAI

## ModBUS Gateway with universal interface for all HVAC systems; Daikin VRV version

**• Unified Climate ModBus Map (UCLIM) - same ModBUS addresses and registers for every brand (Daikin, Mitsubishi, etc.)**
**• Zero Configuration - immediate integration without studying proprietary protocols**
**• Industrial Performance - Instantaneous Response and Comprehensive Diagnostics in Real Time.**

### Applications

Thermoregulation

### Versius

KET-RMB-211.CN.35

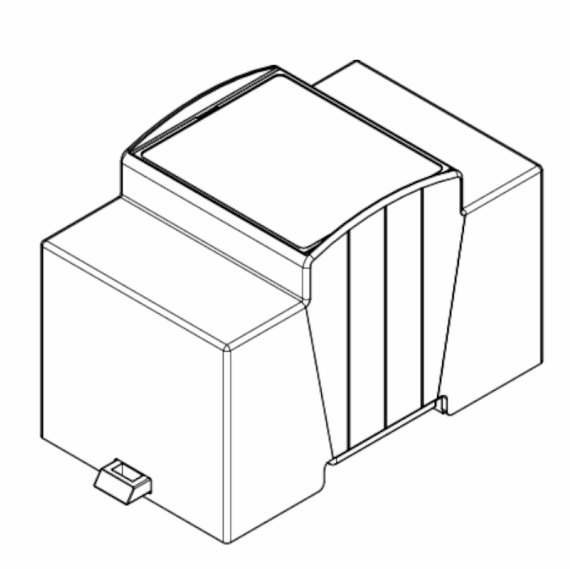

### Technical Features

| | |
|---|---|
| General specifications | **Protection Range**: IP30<br>**Operative Temperature**: -10 ÷ +60 °C |
| Case | **Dimensions**: 53.5 x 90.5 x 61 mm (L x H x D)<br>**Mounting**: The DIN rail<br>**Required DIN modules**: 3 DIN modules<br>**Electric Board Type**: Industrial or consumer unit<br>**Material**: Blend PC/ABS self-extinguishing UL94-V0 |
| Power supply | **Supply Voltage**: 12 ÷ 48 VDC/AC<br>**Consumption**: 370 mA<br>**Connectors types**: Pluggable spring terminal blocks |
| Datalogger function | **Memory Type**: F-RAM: parameter storage in case of power loss |
| Rs485 interface | **Channels**: 1 Master and 1 Slave<br>**Supported Protocols**: ModBUS RTU Slave to the PLC and ModBUS RTU Master to the HVAC control unit<br>**Communication Rate**: 9600 to 38400 bps; default set to 38400 bps<br>**Isolation**: Isolated<br>**Connectors types**: Pluggable spring terminal blocks |
| Digital inputs | **Channels**: 4 digital inputs for dry contact (Max. 30 Hz) |
| Rele' outputs | **Channels**: 4 SPDT relay digital outputs with NC C NO changeover contact<br>**Maximum Switching Voltage**: 250 VAC, 24 VDC<br>**Maximum Rated Current**: 8 A<br>**Max. Inrush Peak Currents**: High-Inrush Model: Peak current up to 100 A<br>**Isolation**: 1,000 MOhm min @ 500 VDC |
| Certifications | **Approvals**: CE |
| Compatibility | **Control Unit**: Daikin Modbus Interface DIII EKMBDXB7V1<br>**Brand**: Daikin<br>**Controlled Units**: VRV Indoor Units |